Building Code Guidelines For Home Pools

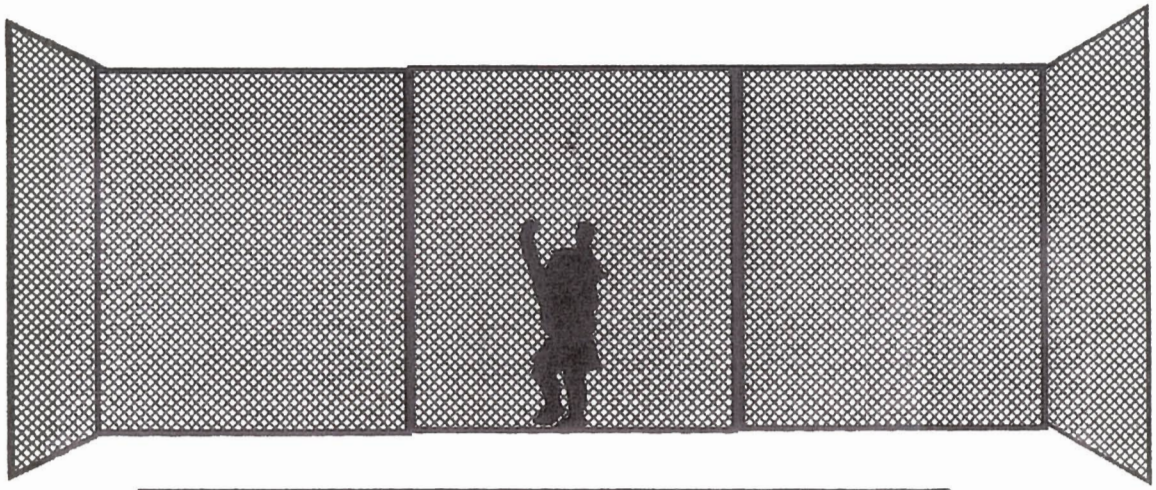

KEEP YOUR POOL

SAFE

CODE REQUIREMENTS FOR SWIMMING POOLS

Localities in Virginia enforce the regulations established by the Virginia Uniform Statewide Building Code (VUSBC) regarding the installation, use and maintenance of all swimming pools, hot tubs and spas for both private and public residential and commercial pools.

No persons shall begin construction of a swimming pool nor substantially alter or reconstruct any swimming pool without having first submitted construction plans and specification to the local building department for review and approval. No work shall be commenced until having first obtained the required permits for the pool, electrical work, mechanical work and fence or barrier protection as required by the regulations.

It is unlawful for any person to construct, maintain, use, possess or control any swimming pool not properly protected by a permanent fence or barrier in accordance with regulations regardless of the date of construction. Any person who shall violate any provisions of the regulations may be subject to legal action as allowed by the VUSBC.

PERMITS

A building permit is required for installing all new pools, hot tubs and spas. An electrical permit is required for any electrical circuits or electrical work added for the pool and a gas or mechanical permit is required for pool heaters or other mechanical equipment for the pool.

The property owner is responsible for ensuring the pool is properly protected by a fence of barrier meeting code requirements during construction and after completion and approval.

The permit holder is responsible for assuring all inspections have been completed and approved including fence protection prior to using the pool. The following information is required to obtain a permit.

1. A site plan shall be submitted that accurately shows the dimensions and construction of the pool to include walks, fence enclosures and proposed distances to lot lines.

2. Pools must comply with the Cape Charles Zoning setback requirements. Approval of the location of the pool by the Zoning office is required prior to issuance of the building permit.

3. All appurtenant structures, installations and equipment, such as shower, dressing rooms, equipment houses or other buildings and structures, including plumbing,

electrical and HVAC systems shall comply with all applicable requirements of the code and authority having jurisdiction.

4. The pool shall be equipped to be completely emptied of water, and such discharge water shall be disposed of in an approved manner that will not create an nuisance to any adjoining property.

Outdoor private swimming pools, including an in-ground, above-ground or on-ground pools, hot tub or spa shall be provided with a barrier. Access gates for private pools shall be equipped to accommodate a locking device.

Swimming Pool Barrier Guidelines

A successful pool barrier prevents a child from getting OVER, UNDER, or THROUGH and keeps the child from gaining access to the pool except when supervising adults are present. A young child can get over a pool barrier if the barrier if the barrier is too low or if the barrier has handholds or footholds for a child to use when climbing.

The top of a pool barrier must be at least **48 inches** above grade, measured on the side of the barrier which faces away from the swimming pool.

For a Solid Barrier: no indentations or protrusions shall be present, other than normal construction tolerances and masonry joints.

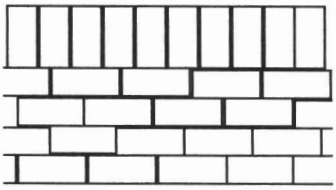

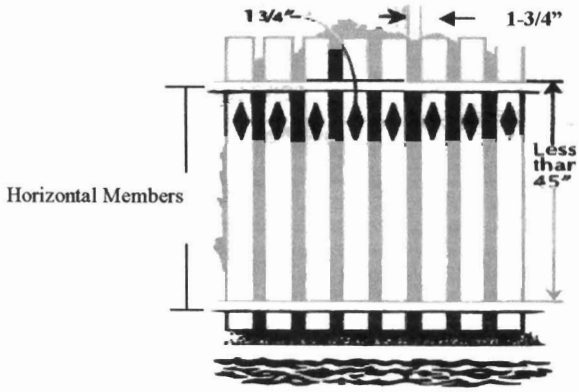

Barriers (Fences) Made Up of Closely Spaced Horizontal Members:
If the distance between the tops of the horizontal members is **<u>less than</u>** 45 inches, the horizontal members shall be on the swimming pool side of the fence. The spacing of the vertical members shall not exceed 1-3/4 inches. This size is based on the foot width of a young child and is intended to reduce the potential for a child to gain a foot hold. If there are any decorative cut-outs in the fence, the space within the cutouts shall not exceed 1-3/4".

Barriers (Fences) Made Up of Widely Spaced Horizontal Members

If the distance between the tops of horizontal members is **more than** 45 inches, the horizontal members may be on the side of the fence facing away from the pool. The spacing between vertical members should not exceed 4 inches. This size is based on the head breadth and chest depth of a young child and is intended to prevent a child from passing through an opening. Again, if there are any decorative cutouts in the fence, the space within the cutouts shall not exceed 1-3/4 inches.

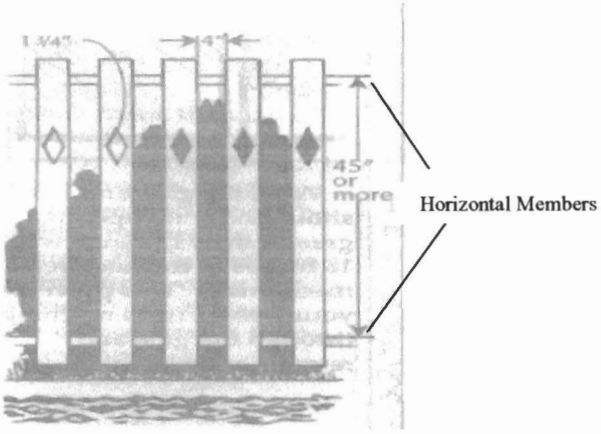

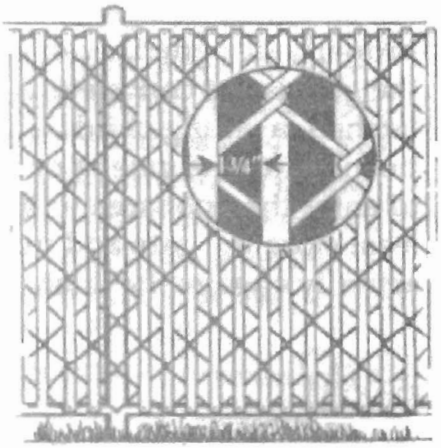

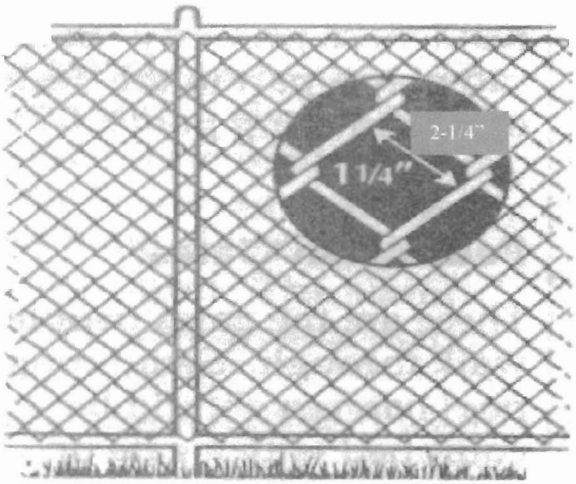

Barriers Made of Chain Link Fence

The mesh size shall not exceed 2-1/4 inches square unless slats, fastened at the top or bottom of the fence, are used to reduce mesh openings to no more than 1-3/4 inches.

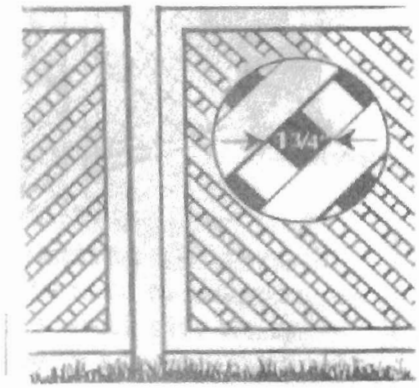

Barriers Fences Made Up of Diagonal Members (Latticework)

The maximum opening in the lattice should not exceed 1-3/4 inches.

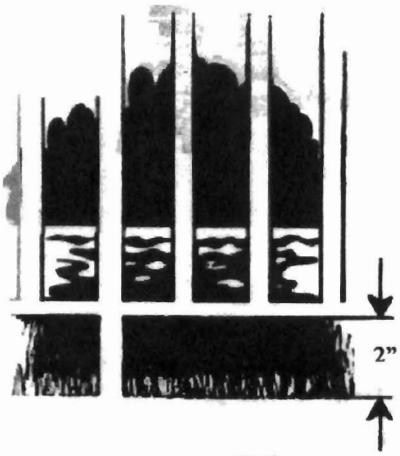

In-ground Pools

For any pool barrier, the maximum clearance at the bottom of the barrier shall not exceed **2 inches** above grade, when the measurement is done on the side of the barrier facing away from the pool.

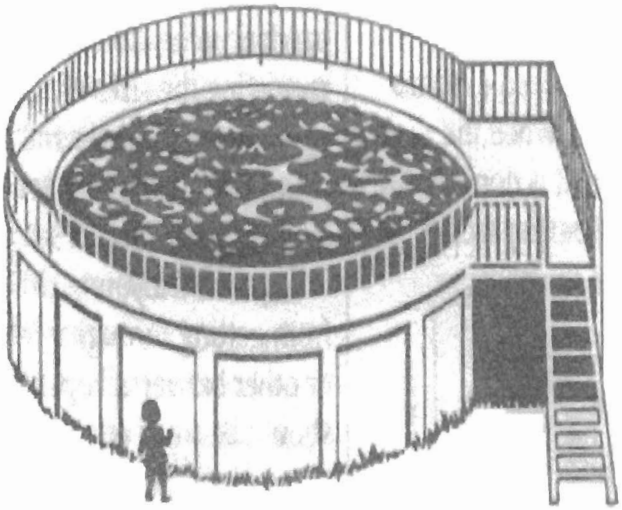

Above-ground Pools

Aboveground pools shall have barriers. The pool structure itself may serve as a barrier fence or a barrier is mounted on top of the pool structure.

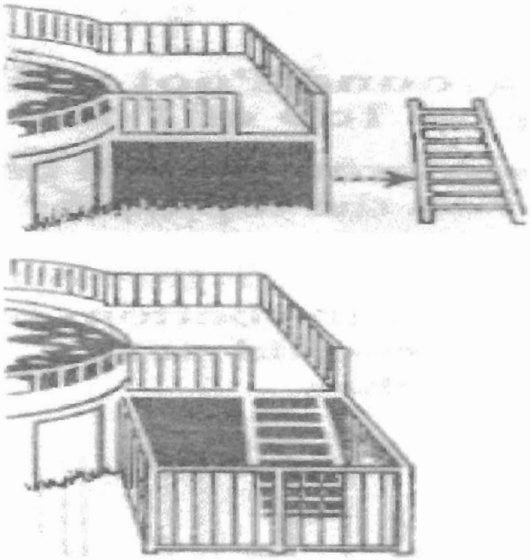

The steps or ladder can be designed to be secured, locked or removed to prevent access, or the steps or ladder can be surrounded by a barrier such as those described above.

ABOVE-GROUND POOL WITH BARRIER ON TOP OF POOL

If an **above-ground** pool has a barrier on the top of the pool, the maximum vertical clearance between the top of the pool and the bottom of the barrier shall not exceed **4 inches**.

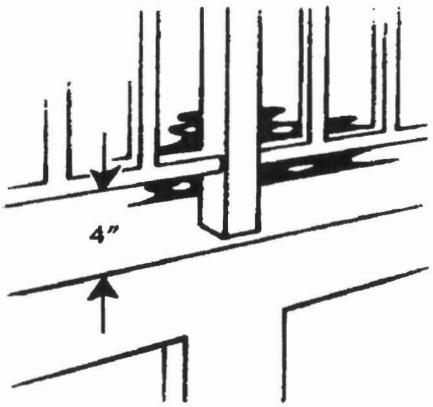

GATES

There are two kinds of gates which might be found on residential property. Both can play a part in the design of a swimming pool barrier.

PEDESTRIAN GATES

These are the gates people must walk through. Swimming pool barriers should be equipped with a gate or gates which restrict access to the pool. A locking device must be included in the gate design. **Pedestrian gates must open outward and away from the pool and shall be self-closing and self-latching**.

If a gate is properly designed, even if the gate is not completely latched, a young child pushing on the gate in order to enter the pool area will at least close the gate and may actually engage the latch.

Where the release mechanism of the self-latching device is **less than** 54 inches from the bottom of the gate, the release mechanism for the gate shall be located on the pool side of the gate and be at least 3 inches below the top of the gate on the side facing the pool. Placing the release mechanism at this height prevents a young child from reaching over the top of a gate and releasing the latch. Gate latches installed in this manner shall have no openings greater than ½ inch with 18 inches of the latch release mechanism. This prevents a young child from reaching through the gate and releasing the latch.

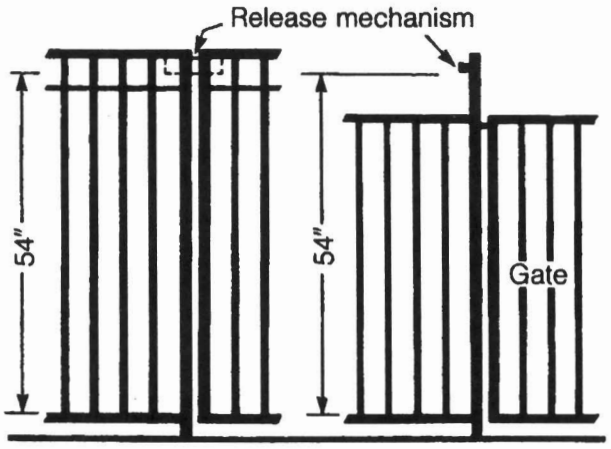

The release mechanism shall be located at 54" or higher from the bottom of the gate.

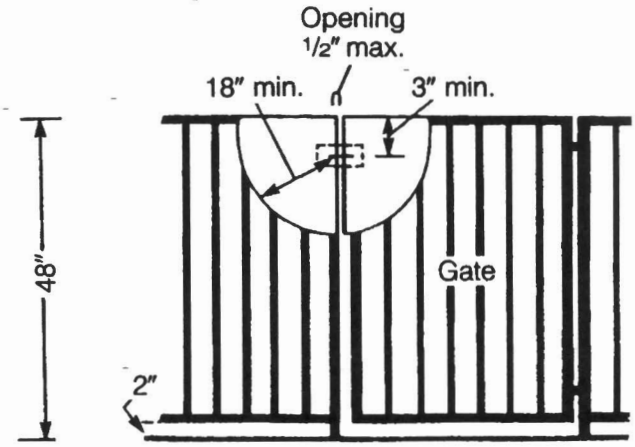

The release mechanism shall be located less than 54" from the bottom of the gate.

ALL OTHER GATES (Vehicle Entrances, ETC.)

Other gates must be equipped with self-latching devices. The self-latching devices must be installed as described for pedestrian gates.

WHEN THE HOUSE WALL FORMS PART OF THE POOL BARRIER

In many homes, doors open directly onto the pool area or onto a patio which leads to the pool.

In such cases, the wall of the house is an important part of the pool barrier, and passage through any doors in the house wall must be controlled by one of the following security measures.

1) **All doors which give direct access to a swimming pool must be equipped with an audible alarm which sounds when the door and/or screen are opened.** The alarm must sound for 30 seconds or more immediately after the door is opened. The alarm must be capable of being heard throughout the house during normal household activity. (The alarm sound should be distinct from other sounds in the house, such as the telephone, doorbell and smoke alarm.) The alarm must have an automatic reset feature.

Because adults will want to pass through house doors in the pool barrier without setting off the alarm, the alarm must have a switch that allows adults to temporarily deactivate the alarm for up to a maximum of 15 seconds. The deactivation switch could be a touchpad (keypad) or a manual switch, and must be located at least 54 inches above the threshold of the door covered by the alarm.

2) Pools equipped with a powered safety cover which complies with ASTM F1346 or

3) Other means of protection approved by the building official.